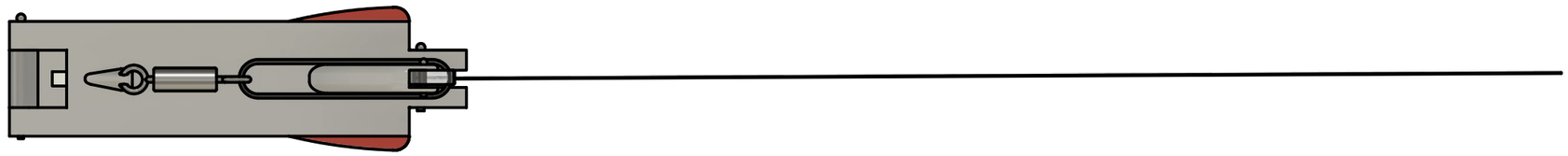

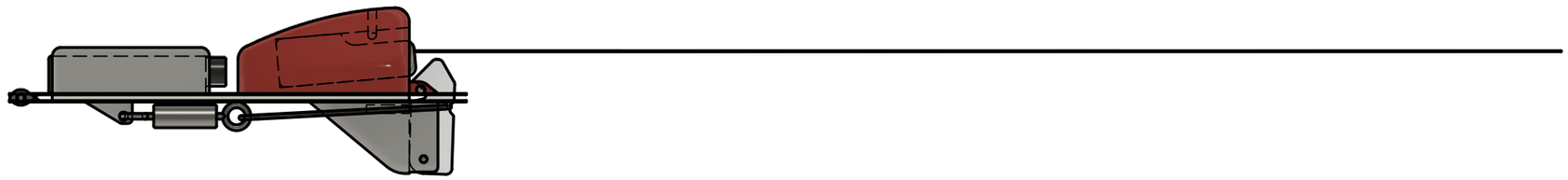

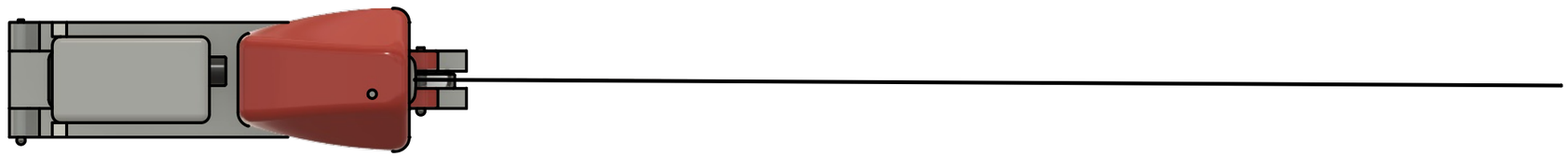

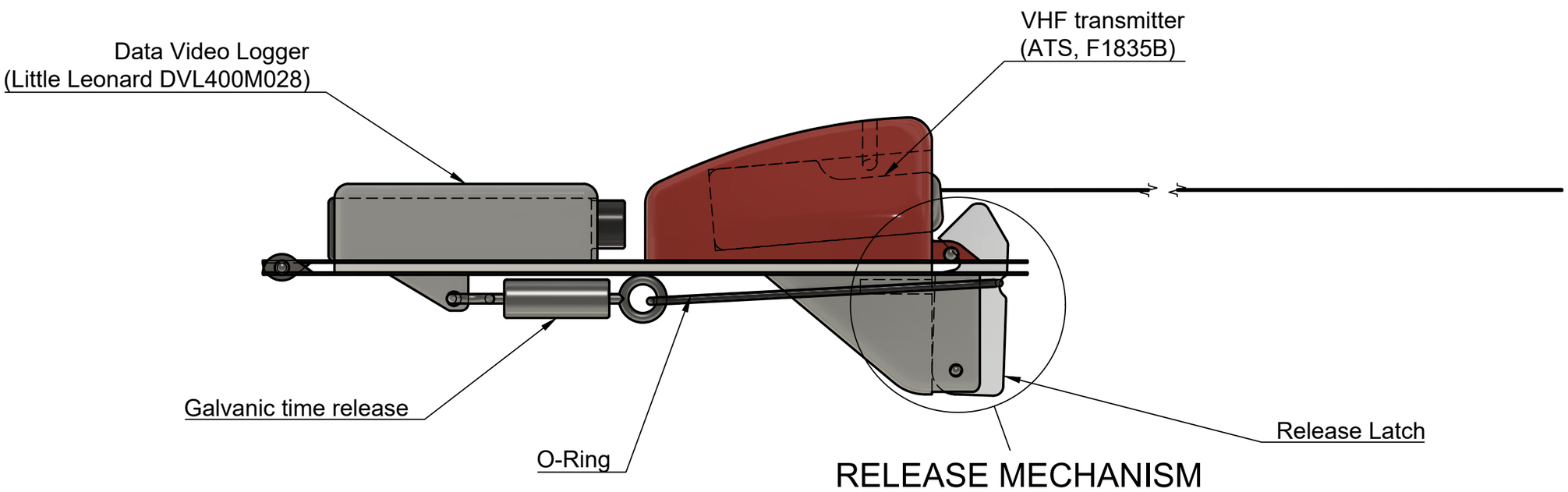

RELEASE MECHANISM (2:1)

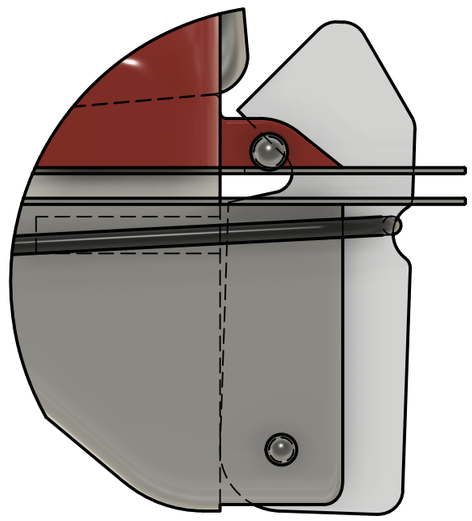

Sensor side

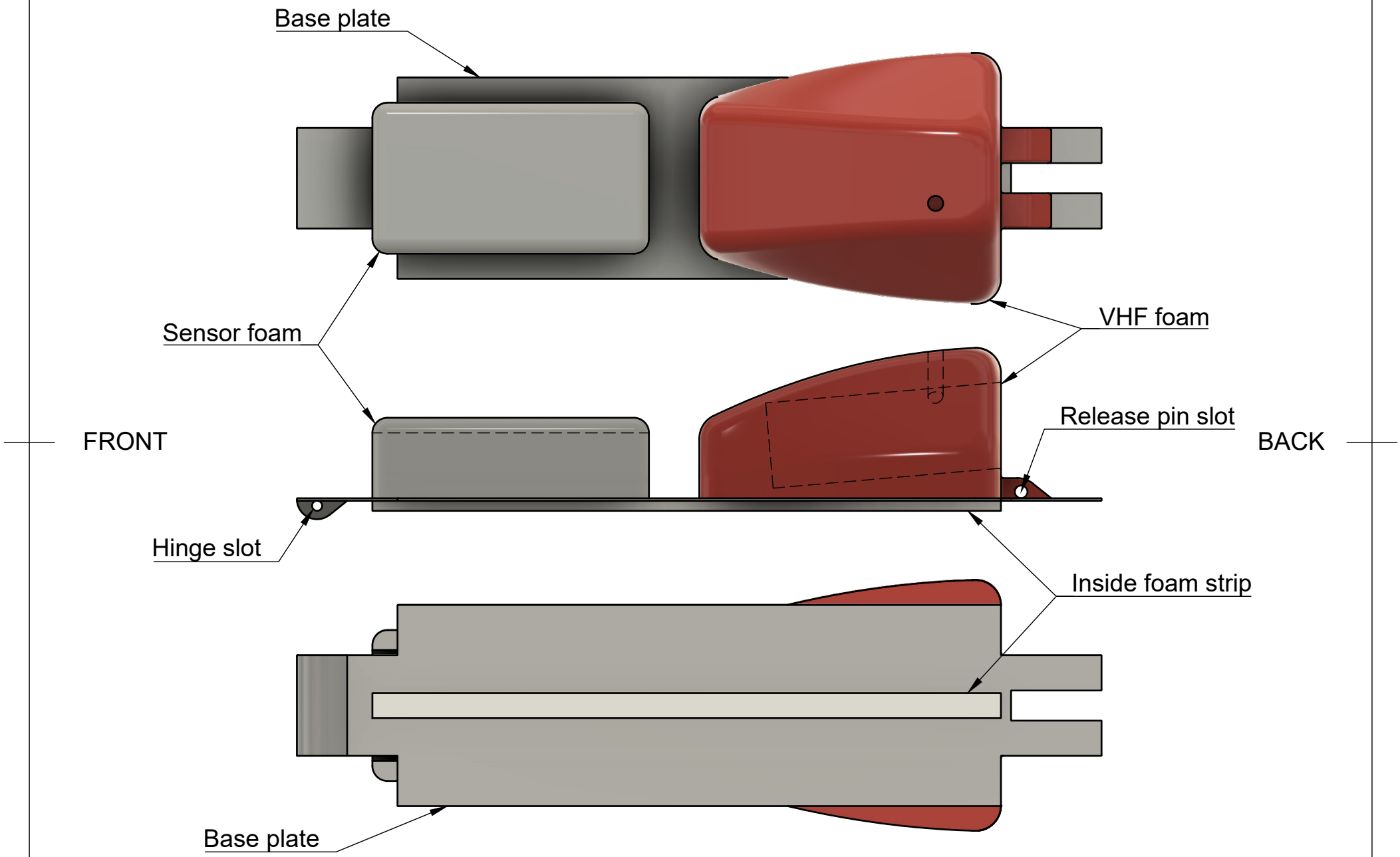
Base plate
Sensor foam
VHF foam
FRONT
Release pin slot
BACK
Hinge slot
Inside foam strip
Base plate

Release side

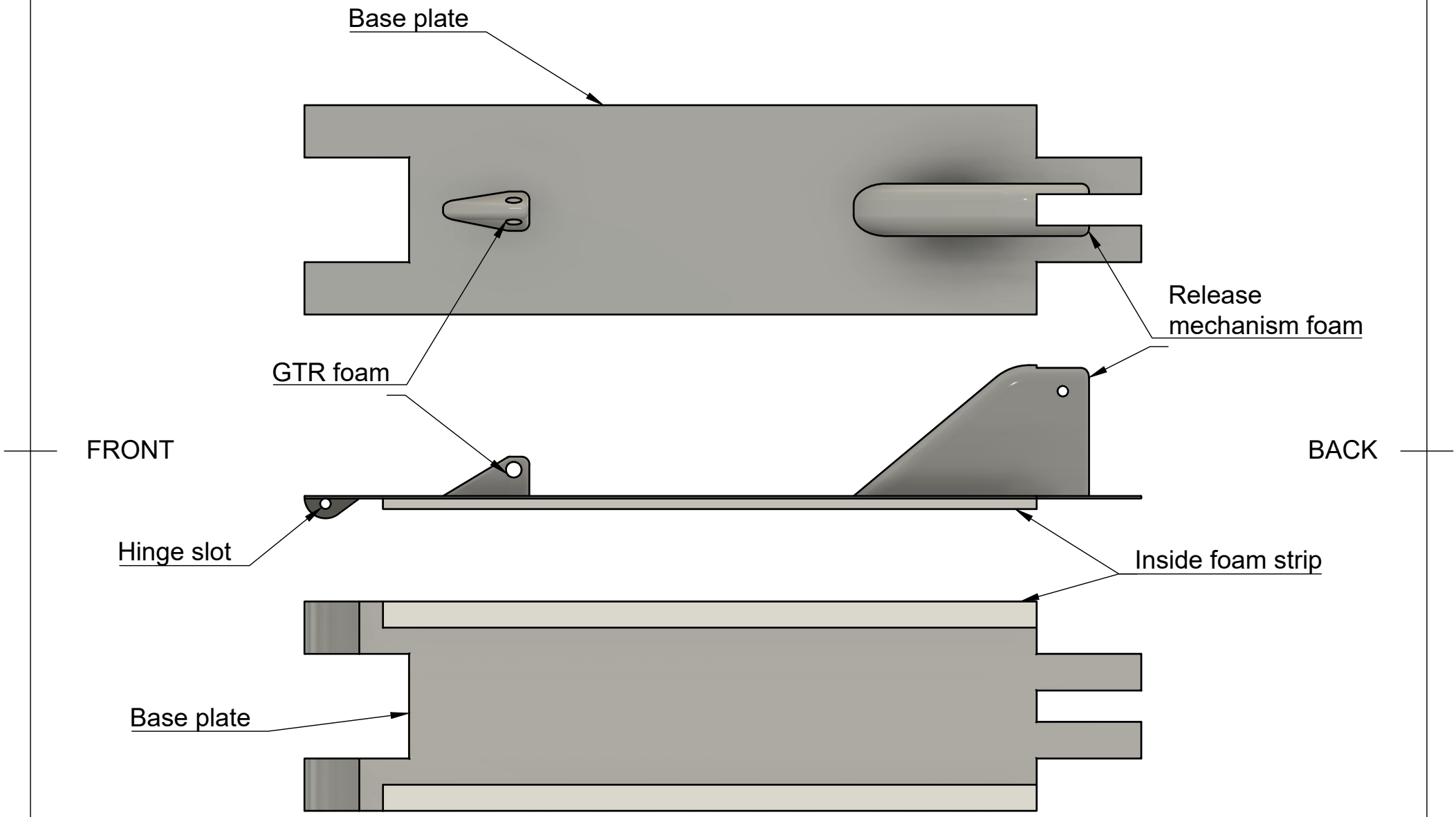

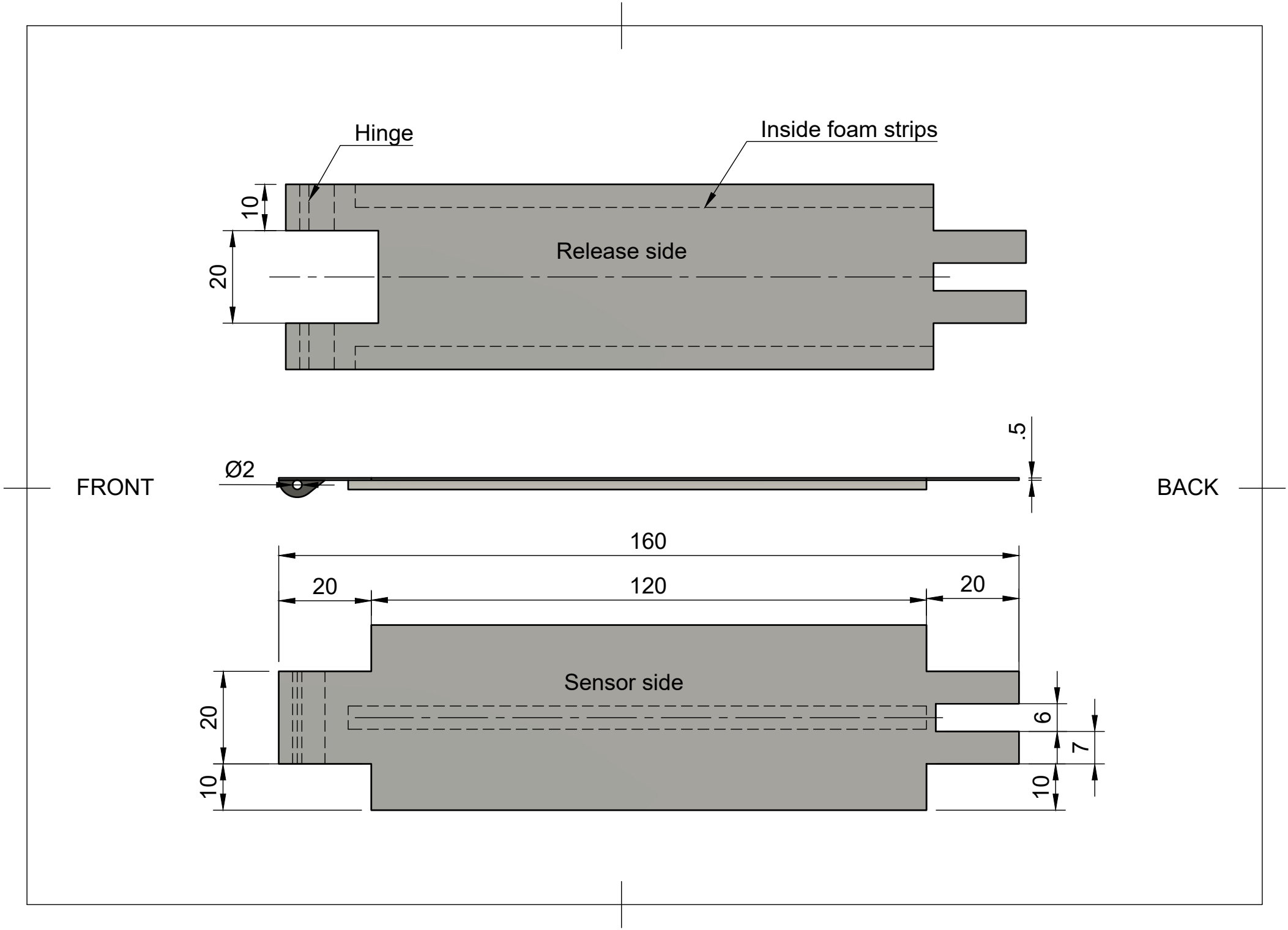
Hinge
Inside foam strips
10
20
Release side
.5
Ø2
FRONT
BACK
160
20
120
20
Sensor side
20
10
6
7
10

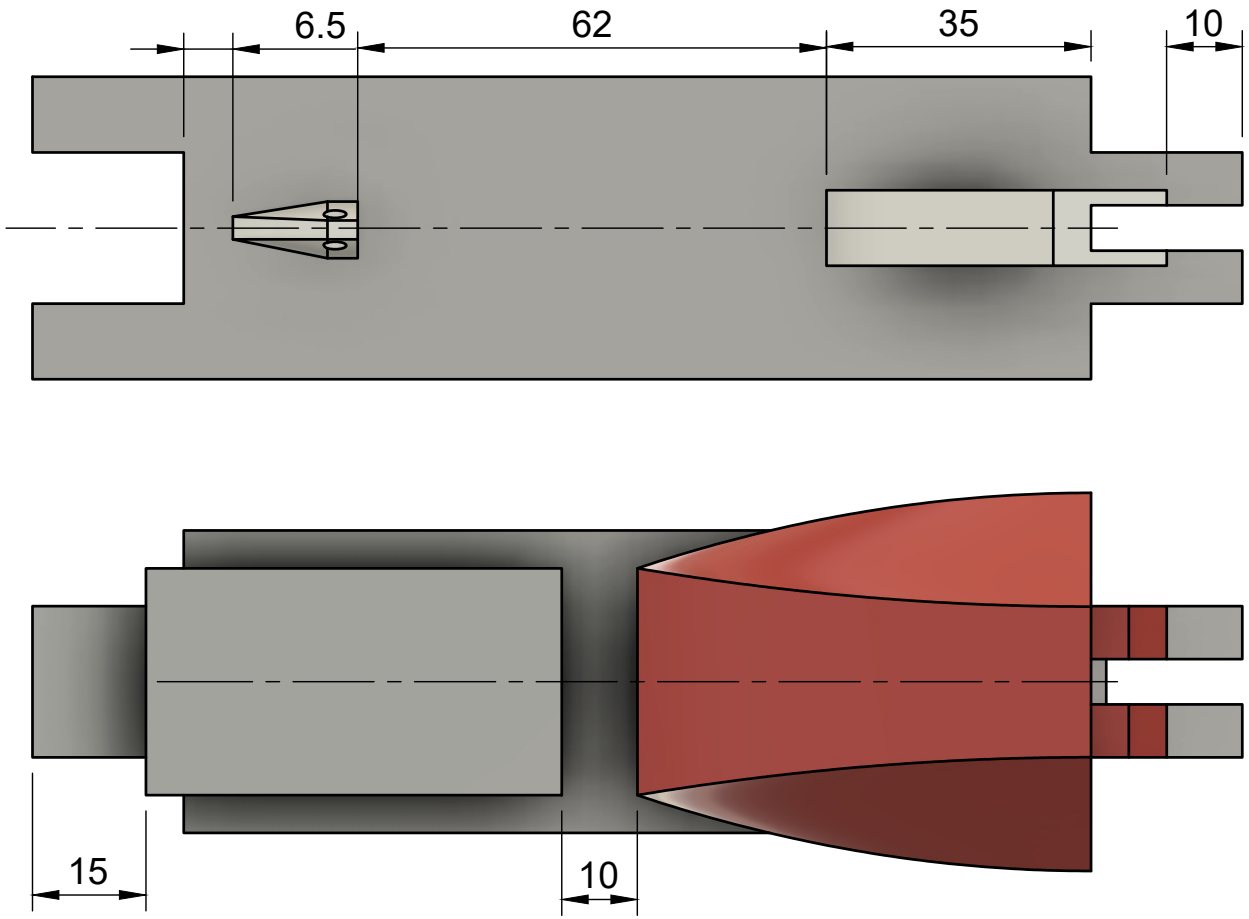
6.5
62
35
10
FRONT
BACK
15
10